AGM Valve Regulated Lead Acid Batteries

Upower
Unlimited power

UP Series
UP55-12
GENERAL PURPOSE AGM

Main Features

- **High Reliability**
  Extensive control processes, from raw materials to delivery to the end customer, within the international quality standards implemented in the company.

- **Valve Regulated Lead Acid batteries**
  Designed for better gas recombination, with minimal hydrogen losses, aid to inner pressure regulation, increasing its performance and security.

Technical Specifications

Nominal Voltage (V)	12	
Nominal Capacity (20 Hr)	55.0 Ah	
Dimensions	Length:	228 ± 2 mm (8.98 inches)
	Width:	137 ± 2 mm (5.39 inches)
	Height:	210 ± 2 mm (8.27 inches)
	Total Height (+ terminal):	230 ± 2 mm (9.06 inches)
Approx. Weight	17.7 Kg (39 lbs)	
Terminal	T6	
Container Material	ABS	
Rated Capacity	58.8 Ah / 2.94 A	(20hr, 1.80V/cell, 25ºC / 77ºF)
	55.0 Ah / 5.50 A	(10hr, 1.80V/cell, 25ºC / 77ºF)
	47.8 Ah / 9.57 A	(5hr, 1.75V/cell, 25ºC / 77ºF)
	42.9 Ah / 14.3 A	(3hr, 1.75V/cell, 25ºC / 77ºF)
	34.1 Ah / 34.1 A	(1hr, 1.60V/cell, 25ºC / 77ºF)
Maximum Discharge Current	660 A (5s)	
Internal Resistance	Approx. 7.5 mΩ	
Operating Temperature Range	Discharge:	-15 ~ 50ºC (5 ~ 122ºF)
	Charge:	0 ~ 40ºC (32 ~ 104ºF)
	Storage:	-15 ~ 40ºC (5 ~ 104ºF)
Nominal Operating Temperature Range	25 ± 3ºC (77 ± 5ºF)	
Cycle Use	Initial Charging Current less than 16.5 A Voltage. 14.4V~15V at 25ºC (77ºF) Temp. Coefficient -30mV/ºC	
Standby Use	No limit on Initial Charging Current Voltage. 13.5~13.8V at 25ºC (77ºF) Temp. Coefficient -20mV/ºC	
Capacity affected by Temperature	40ºC (104ºF) 103%	
	25ºC (77ºF) 100%	
	0ºC (32ºF) 86%	
Self Discharge	Batteries may be stored for up to 6 months at 25ºC (77ºF) and then a freshening charge is requiered.	

Applus ISO 9001 EC-7345/12 — Applus ISO 14001 MA-2709/12
VdS — UL MH26866 — CE — ETS EMC tested Germany — Intertek — ETL SEMKO

MASTER BATTERY
Paseo de Extremadura, 39 - 28935 Móstoles - Madrid (Spain)
Tel. +34 918 021 649 - Fax. +34 917 750 542
info@masterbattery.es - www.masterbattery.es/en

zeroCO2

AGM Valve Regulated Lead Acid Batteries

UP55-12

Upower
Unlimited power

Battery Dimensions

Terminal T6
Unit: mm (inches)

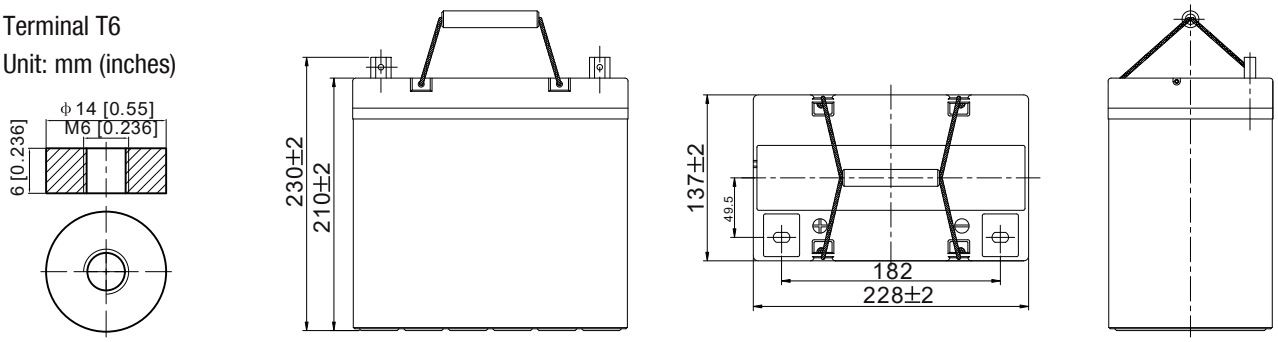

Battery Discharge Tables

Constant Current Discharge (Amperes) at 25ºC (77ºF)														
F.V/Time	10min	15min	20min	30min	45min	1h	2h	3h	4h	5h	6h	8h	10h	20h
1.85V/cell	64.4	54.1	48.0	39.8	30.7	26.3	17.0	12.8	10.5	8.82	7.73	6.20	5.33	2.84
1.80V/cell	73.6	60.8	53.1	43.3	33.1	27.8	18.3	13.8	11.1	9.35	8.19	6.52	5.50	2.94
1.75V/cell	83.6	68.5	58.7	47.0	36.2	30.3	19.0	14.3	11.5	9.57	8.44	6.74	5.65	3.02
1.70V/cell	94.5	76.0	64.8	51.3	38.9	32.0	20.0	15.1	12.0	10.1	8.85	7.03	5.86	3.09
1.65V/cell	101.4	81.4	68.9	54.1	41.2	33.1	20.8	15.7	12.5	10.4	9.16	7.26	6.03	3.19
1.60V/cell	111.6	89.1	74.8	57.8	42.8	34.1	21.3	16.1	12.8	10.7	9.35	7.39	6.16	3.24

Constant Power Discharge (Watts) at 25ºC (77ºF)														
F.V/Time	10min	15min	20min	30min	45min	1h	2h	3h	4h	5h	6h	8h	10h	20h
1.85V/cell	120.2	102.1	91.5	76.7	59.7	51.2	33.4	25.2	20.7	17.5	15.3	12.4	10.7	5.69
1.80V/cell	135.9	113.1	99.7	82.0	63.9	53.8	35.7	26.9	21.9	18.4	16.2	13.0	11.0	5.88
1.75V/cell	151.9	125.9	109.1	88.4	69.0	58.4	37.0	27.9	22.6	18.8	16.7	13.4	11.3	6.02
1.70V/cell	167.7	137.8	119.5	96.0	74.1	61.6	38.8	29.3	23.5	19.9	17.4	13.9	11.7	6.17
1.65V/cell	178.5	146.4	126.2	100.5	77.7	63.2	40.0	30.4	24.4	20.4	18.0	14.4	12.0	6.35
1.60V/cell	191.9	157.7	135.6	106.5	80.3	64.8	40.9	31.0	24.8	20.8	18.3	14.6	12.2	6.45

MASTER BATTERY
Paseo de Extremadura, 39 - 28935 Móstoles - Madrid (Spain)
Tel. +34 918 021 649 - Fax. +34 917 750 542
info@masterbattery.es - www.masterbattery.es/en

zeroCO2

Discharge Characteristics

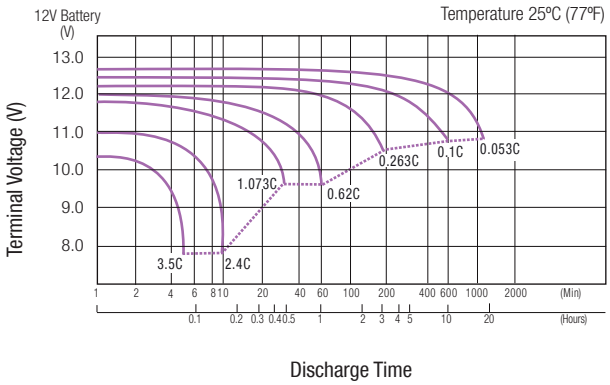

Temperature Effects in Relation to Battery Capacity

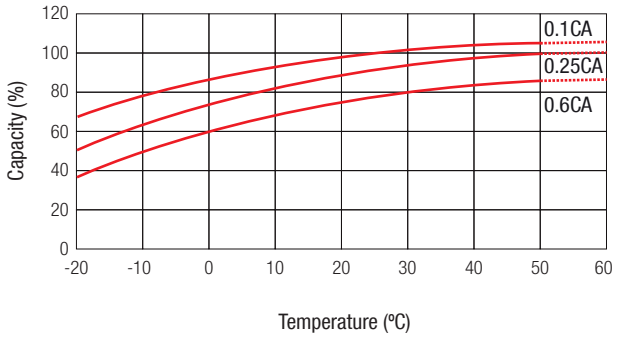

Float Charging Characteristics

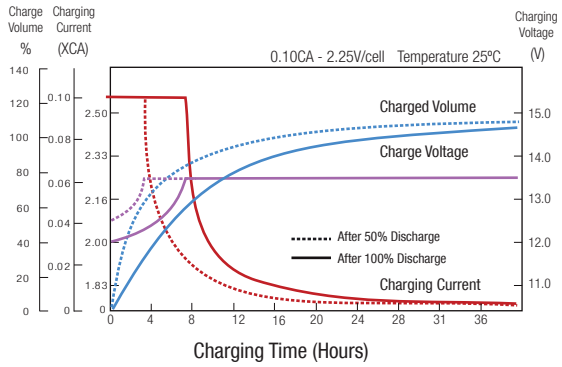

Effect of Temperature on Long Term Float Life

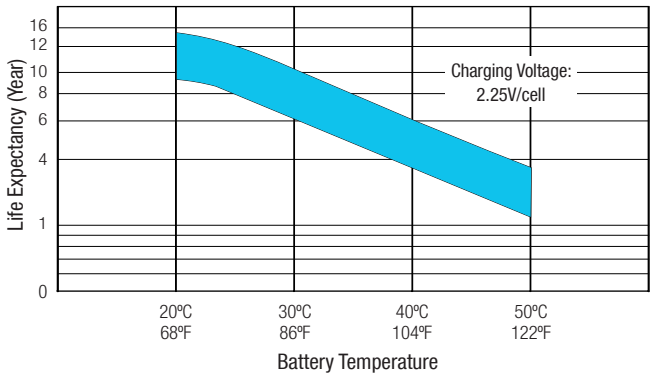

Self Discharge Characteristics

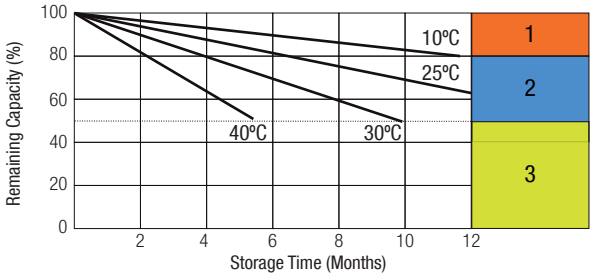

1 No supplementary charge required
(Carry out supplementary charge before use if 100% capacity is required).

2 Supplementary charge required before use. Optional charging way as below:
1. Charged for above 3 days at limited current 0.25CA and constant voltage 2.25V/cell.
2. Charged for above 20 hours at limited current 0.25CA and constant voltage 2.45V/cell.
3. Charged for 8~10 hours at limited current 0.05CA.

3 Supplementary charge may often fail to recover the capacity.
The battery should never be left standing till this is reached.

MASTER BATTERY
Paseo de Extremadura, 39 - 28935 Móstoles - Madrid (Spain)
Tel. +34 918 021 649 - Fax. +34 917 750 542
info@masterbattery.es - www.masterbattery.es/en

zeroCO2